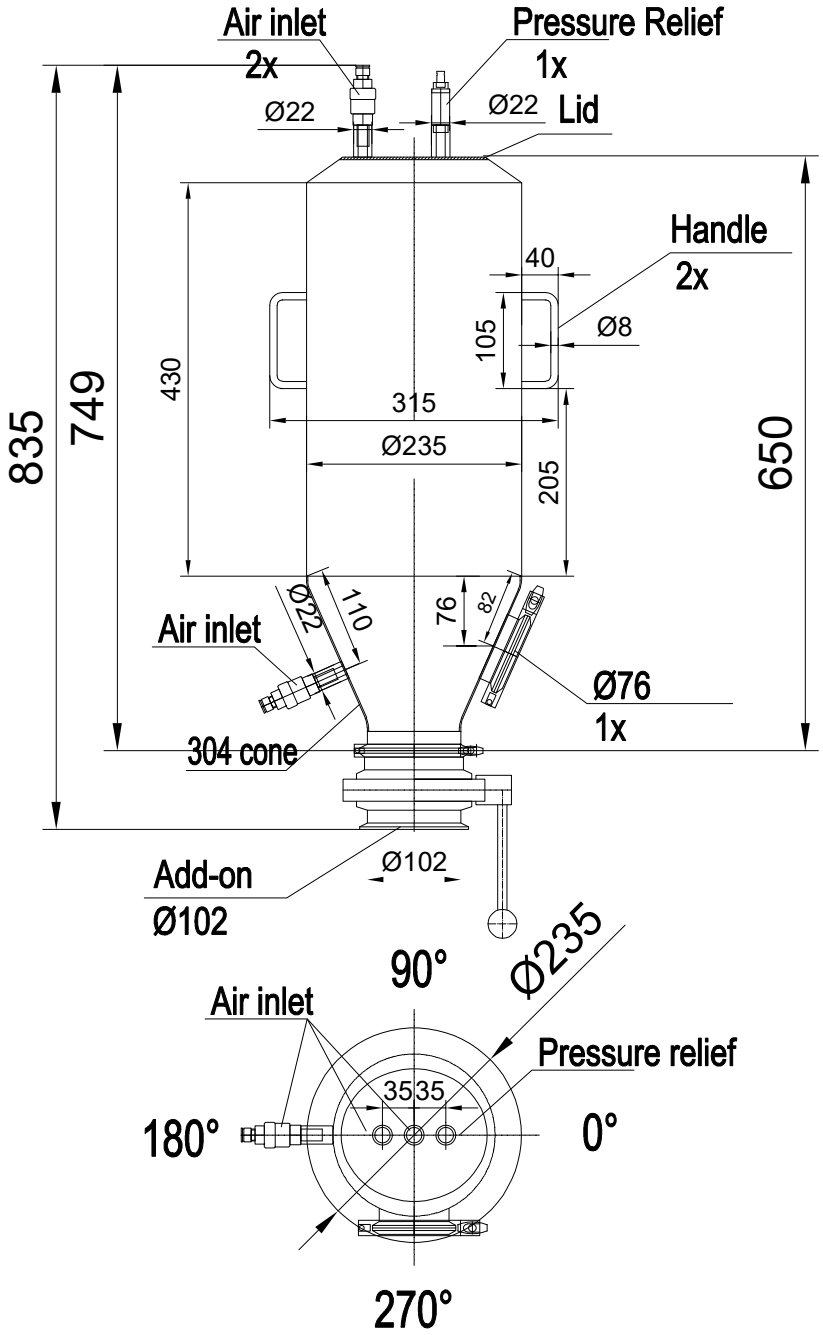

Scale	1:8	Time	2026.01.23	Version	B	Total page	1